S21 S standard WC pan and 700 S WC pan for people with reduced mobility

Wall-hung





- Wall-hung WC pan.
- Available with 700mm elongated pan for improved comfort for people with reduced mobility (700 S).
- Compatible with all standard frame systems available on the market.
- Elegant and simple design.
- Bacteriostatic 304 stainless steel.
- Stainless steel thickness: 1.5mm.
- One-piece pressed WC bowl, seam-free for easy maintenance and better hygiene.
- WC bowl surface is polished with rounded edges for easy cleaning.
- Concealed perimetral flushing rim.
- Horizontal water inlet: Ø 55mm.
- Horizontal waste outlet: Ø 100mm.
- Water saving: works with 4L or more of water.
- Shrouded WC pan.
- Pre-drilled holes for fixing the toilet seat. Supplied with stainless steel blanking caps when installed without toilet seat.
- Quick and easy to install from the front thanks to a stainless steel mounting frame.
- Supplied with fixing plate and 6 theft prevention TORX security screws.
- CE marked. Complies with European standard EN 997 for 4L flush.
- Optional toilet seat with or without lid *(see page 47)*.
- The S21 S WC pan can be ordered with black protective pads already fixed to the WC pan: ref. 110310PAD.
- Available for cross wall installation in service ducts *(see page 88)*.
- Weight: 11kg for the S21 S model; 14.5kg for the 700 S model.
- 30-year warranty.

For flush valves see the DELABIE catalogue "Water Controls for Public and Commercial Places" (DOC 609INT).

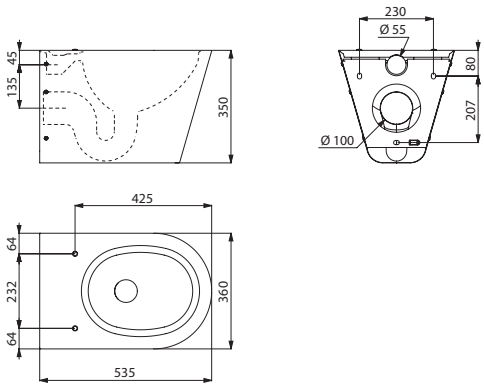

110310

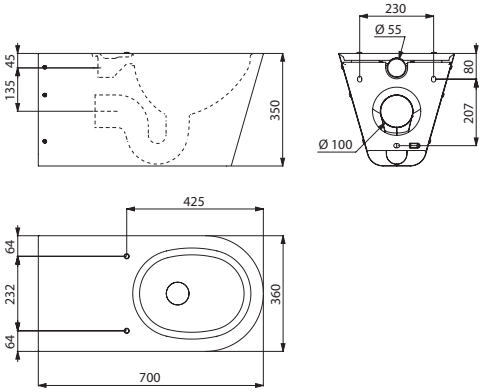

110710

Wall-hung S21 S WC pan		
Polished satin 304 stainless steel		**110310**
With black protective pads fixed to WC pan		**110310PAD**
Wall-hung 700 S WC pan for people with reduced mobility		
Polished satin 304 stainless steel		**110710**

: dispatch within 4 weeks : stock item