- **Teflon® or PTFE finish**: withstands intensive use, withstands chemical products and is easy to clean
- **Design**: black is forever in fashion, a sure bet that is timeless, brings style to washrooms
- **Go all black**: perfectly matches with black tempered glass WC control plates and matte black finish hygienic accessories

S21 S, 700 S and S21 P WC pans

Wall-hung or floor-standing



- Wall-hung or floor-standing WC.
- Elegant and simple design.
- Bacteriostatic 304 stainless steel. Stainless steel thickness: 1.5mm.
- Matte black Teflon® finish.
- One-piece pressed WC bowl, seam-free for easy maintenance and better hygiene.
- Concealed perimetral flushing rim.
- Horizontal water inlet Ø 55mm.
- Horizontal or vertical waste outlet depending on the model, Ø 100mm.
- Water saving: works with 4L or more of water.
- Pre-drilled holes for fixing the toilet seat. Supplied with stainless steel blanking caps when installed without toilet seat.
- Quick and easy to install from the front thanks to a stainless steel mounting frame or 2 access panels with TORX security screws depending on the model.
- CE marked. Complies with European standard EN 997 for 4L flush.
- Option: seats with or without lid *(see page 47)*.
- Weight: 11kg for model S21 S; 14.5kg for model 700 S; 14kg for model S21 P.
- 30-year warranty.

For taps see the DELABIE catalogue "Water Controls for Public and Commercial Places" (DOC 609INT).

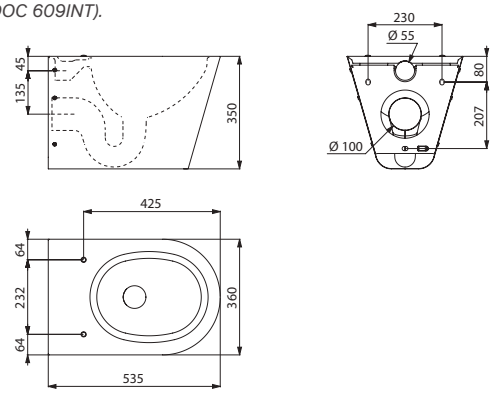

110310BK

WC pan - Matte black Teflon® finish		
Wall-hung WC pan (S21 S)		**110310BK**
Wall-hung WC pan for people with reduced mobility (700 S)		**110710BK**
Floor-standing WC pan (S21 P)		**110300BK**

MONOBLOCO S21 WC pan

With cistern



- Floor-standing WC with dual flush cistern 3L/6L.
- Bacteriostatic 304 stainless steel. Stainless steel thickness: 1.5mm.
- Matte black Teflon® finish.
- One-piece pressed WC bowl, seam-free for better hygiene.
- Concealed perimetral flushing rim. Water supply can be recessed from below or exposed from the side (right/left).
- Recessed horizontal or vertical waste outlet. Supplied with PVC pipe.
- Pre-drilled holes for fixing the toilet seat. Supplied with stainless steel blanking caps when installed without toilet seat.
- Quick to install: 2 access panels with TORX security screws.
- CE marked. Complies with European standard EN 997 for 4L flush.
- Option: seats with or without lid *(see page 47)*.
- Weight: 21kg.
- 30-year warranty.

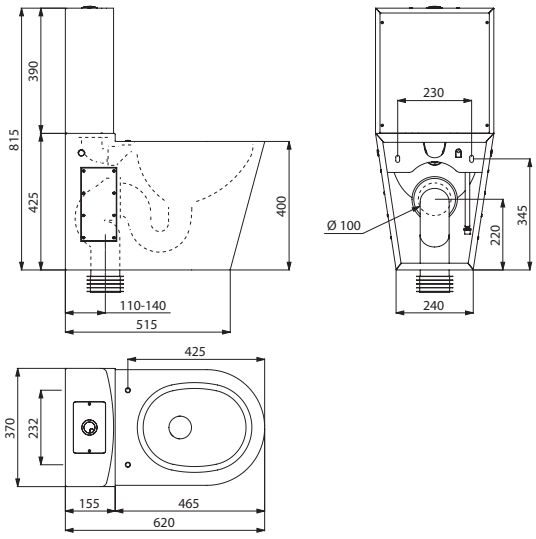

110390BK

MONOBLOCO S21 WC pan with cistern Matte black Teflon® finish		
		110390BK

: dispatch within 6 weeks : stock item