KOMPACT combi

Wall-mounted installation with access panels



- Combination unit: washbasin and WC pan (hung or floor-standing) with recessed toilet roll holder.
- Wall-mounted installation with 3 access panels, 2 on the sides and 1 on the top, with theft prevention TORX security screws.
- Bacteriostatic 304 stainless steel. Stainless steel unit thickness: 2mm.
- Rounded corners and edges for improved safety.
- Smooth surface for easy cleaning.
- Suitable for prisons, police stations, etc.
- WC pan is completely welded to washbasin, no screws: makes cleaning easier and prevents concealment of objects.
- Available with WC pan on the right, left or central to the unit.
- Washbasin equipped with time flow tap: stainless steel tamperproof push-button and anti-blocking system, 7-second time flow, M½".
- Available with 2 buttons: cold water/mixed water.
- WC equipped with time flow flush valve, 7-second time flow, M¾".
- Water inlet: washbasin M½", WC M¾".
- Recessed horizontal water outlet: Ø 100mm.
- Supplied with washbasin trap.
- Easy to install: only one water outlet for both washbasin and WC, water inlet and outlet already connected.
- Weight: 36kg. 30-year warranty.

KOMPACT combi - Wall-mounted installation with access panels		
Hung WC pan		
Polished satin 304 stainless steel - Right hand WC pan	◷	**160300**
Polished satin 304 stainless steel - Left hand WC pan	◷	**160400**
Polished satin 304 stainless steel - Central WC pan	◷	**160500**
Floor-standing WC		
Polished satin 304 stainless steel - Right hand WC pan	◷	**160600**
Polished satin 304 stainless steel - Left hand WC pan	◷	**160700**
Polished satin 304 stainless steel - Central WC pan	◷	**160800**
KOMPACT combi - Wall-mounted installation with access panels With 2 buttons: cold water/mixed water		
Floor-standing WC		
Polished satin 304 stainless steel - Right hand WC pan	◷	**161600**
Polished satin 304 stainless steel - Left hand WC pan	◷	**161700**
Polished satin 304 stainless steel - Central WC pan	◷	**161800**

◷ : dispatch within 4 weeks ▣ : stock item

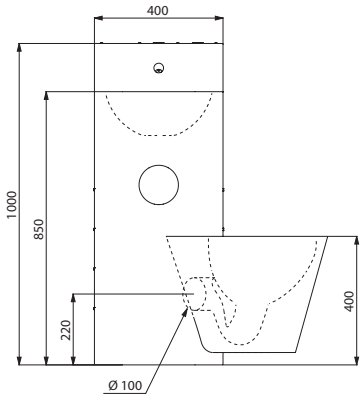

160300

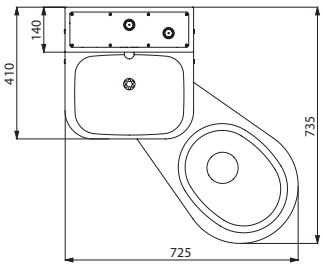

160300/160600

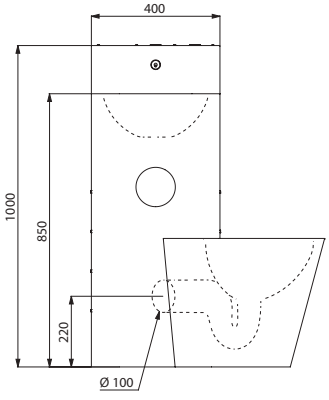

160600

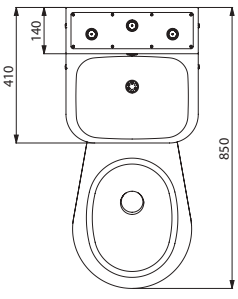

161800

SECURE SECTOR