Mia Plus Square NEW

Product / Code	Description	Body / Door material	Pallet Quantity (pcs)
	Washbasin Unit, 100 cm, with one drawer, one tap hole		
69777	Anthracite high gloss	Melamine onto MDF	4
69778	White high gloss	Melamine onto chipboard	4
69779	Golden oak	Melamine onto chipboard	4
69803	Cordoba	Melamine onto chipboard	4
	WxDxH 100x47x49 cm 7678B003-0001 washbasin is included. Trap and waste set is included. The drawers are metal-sided.	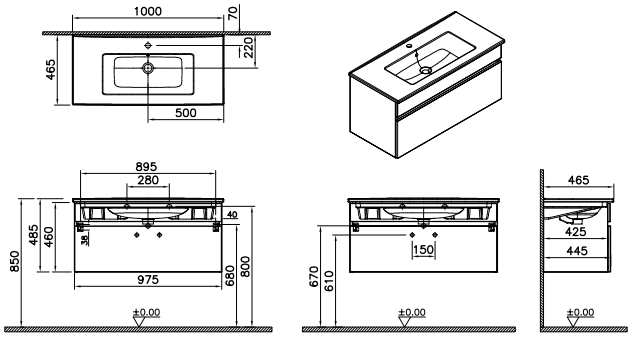	
	Washbasin unit, 100 cm, with two drawers, one tap hole		
69753	Anthracite high gloss	Melamine onto MDF	4
69754	White high gloss	Melamine onto chipboard	4
69755	Golden oak	Melamine onto chipboard	4
69804	Cordoba	Melamine onto chipboard	4
	WxDxH 100x47x65 cm 7678B003-0001 washbasin is included. Trap and waste set is included. The drawers are metal-sided.	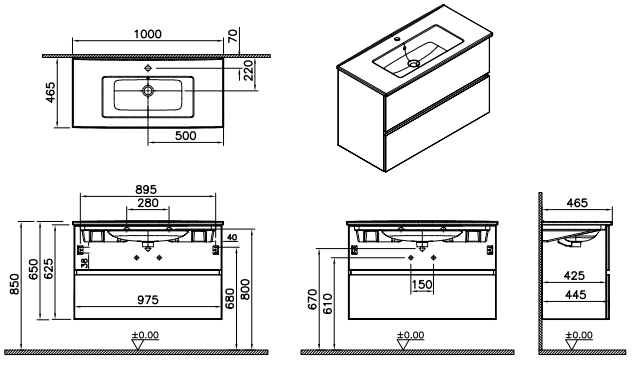	

- WxDxH refers to WidthxDepthxHeight
- 2 years warranty is offered for bathroom furniture products. • Please refer to technical drawings for exact measures.